BAROUMAND DESIGNS (A)

Richard P. Rumelt

"My ambition is to build a business based on skills in design," remarked Mr. Morteza Baroumand, the 32 year-old managing director and sole owner of Baroumand Designs. "Ultimately," he continued, "I would like to have a design studio in Paris or London and workshops in Iran, and later perhaps in Morocco or Greece to produce the items I design."

In Tir, 1352, (July 1973) Baroumand Designs completed its second year of operations. Located in Tehran, Iran, Baroumand Designs finished high quality leathers from semi-processed skins which it purchased from several local sources. It's principal products, which it produced from this leather, were fine leather ladies' handbags and leather-on-chrome furniture. The company also produced hand painted leather boxes and skins, belts, wallets and key holders, shoes and leather garments and was experimenting with designs for fabric blouses and ties with silk screened patterns. Total sales during 1351 were about Rls. 24 million and the firm employed 46 full-time workers in its workshops.

Although most of the company's sales had so far been to local shops, Mr. Baroumand was convinced that there was a significant potential market for his products in Europe and the United States. Buyers and agents who had examined his products generally conceded that the designs were unique and stylish and that the level of craftmanship displayed was of a high order. Despite this positive response, which had included a number of direct requests for shipments of handbags, Mr. Baroumand had not exported more than a token amount.

One key problem was that the company did not as yet have sufficient space or a large enough group of skilled workers to handle an order of the size usually requested by foreign buyers. In order to reach his intermediate goal of becoming primarily an exporter by 1975, Mr. Baroumand planned to rapidly expand his firm's production capacity in the near future. By Tir, 1352, he had already finalized plans for constructing and moving to a new and larger plant site in Karadj.

The impending move to Karadj created a number of immediate problems for Mr. Baroumand and also forced him to confront several issues concerning the nature and scope of his business. In the short term, he faced the problem of hiring and training local workers for the new Karadj plant. This issue was complicated by uncertainty as to how many of the skilled workers would move to Karadj with the company and by the need to create viable cost control, production control, and incentive systems before the workforce grew much further.

Copyright © 1974 by the Iran Center for Management Studies

The more basic issues which concerned Mr. Baroumand were his export marketing strategy, the assurance of a continuing supply of leather, and the management of expanded operations. The key questions Mr. Baroumand felt had to be resolved were: (1) Which channels and what type of pricing policy should he use in reaching export markets, and (2) How should the workforce be supervised and the company managed as its scale of operations increased, and (3) Should the company integrate backwards into tanning operations?

Company History

Mr. Baroumand received his education in industrial design in England and entered the leather trade in 1345 (1966) by designing a collection of "mod" women's shoes. The samples, hand-made in Iran, were successful enough to produce an order for 400 pairs from several fashionable Chelsea (London) boutiques. Mr. Baroumand relayed the order to the Iranian sub-contractor but never received any shoes.

After designing a new collection of shoes Mr. Baroumand was offered the opportunity to form a partnership with two Englishmen to create a new shoe store: the Chelsea Cobbler. Mr. Baroumand chose to enter into a supplier relationship with this new store rather than become a formal partner. This time the shoes did arrive from Iran without delay but the first pair sold fell apart as the customer was leaving the store. Mr. Baroumand decided that he would have to go back to Iran to oversee the production of shoes. Upon his return he found so many problems that he gave up the idea of supplying Chelsea Cobbler from Iran.[1]

During the next few years Mr. Baroumand worked in Iran attempting to develop stable relationships with local artisans who could manufacture the shoes he designed. These attempts were unsuccessful and in 1970 he switched his attention to handbags. The advantage of working with handbags rather then shoes was that a lower level of craftmanship was required and there was an increasing demand for Iranian made "handicraft" items.

In December 1970, Mr. Baroumand entered into a partnership with Mr. Mohammed Naraghi who was gaining a reputation in the design of textile "handicraft" products. The Iranian Government Handicrafts Center placed orders for Mr. Baroumand's handbags and sales began to grow. During this period Mr. Baroumand began to develop a technique for painting on leather that eventally became his "trademark". The growth of the business, however, strained the partnership to the breaking point. After a major disagreement over which partner would have responsibility for the increasingly successful leather goods line, Mr. Baroumand walked out. "I left everything with him", he recalled, "all I had left was a handful of promissory notes. I learned that a partnership in Iran won't work unless you clearly establish who is going to be the boss."

---

[1]By 1973 the Chelsea Cobbler had become a very successful business with stores in London and New York. Baroumand Designs supplied it with some handbags and matching leather from which shoes were made by the store's own labor force of Greek and Cypriot cobblers.

After breaking with Mr. Naraghi, Mr. Baroumand quickly began collecting the people he needed to create a new enterprise. In August 1971 Baroumand Designs came into being and by Autumn of that year he had hired Mr. A. Bedani to do textile designs and assist him in other aspects of the business. Soon after, Mr. M. Tabrizi, who had eight years of experience in leather processing in Germany joined the company. The supervision of the company's workshops was placed in the hands of a retired Army officer who was replaced by Mr. H. Sadaghi in 1973.

Exhibit 1 shows Baroumand Designs' balance sheet for 1351 and Exhibit 2 shows its revenues by product line for 1350 and 1351. The company's organizational structure as of August, 1973, is shown in Exhibit 3.

Baroumand Design's Products

Baroumand Design's product line was made up of a wide variety of leather and textile goods in four major categories: handbags, paintings on leather and boxes and small leather goods, furniture, and garments and textiles. Exhibit 4 shows the breakdown of sales by customer for the years 1350 and 1351.

Handbags. Baroumand Designs produced 35 different models of ladies handbags, ranging in price from Rls. 1100 to Rls. 2000, the average handbag selling for about Rls. 1400.

The basic styling concepts of the handbags were drawn from European practice and about 70% of the handbags sold were unembelished leather. The remainder were decorated with some type of trim, textile work or hand painted patterns that were taken from traditional Iranian artistic motifs. Mr. Baroumand noted that his handbags were styled to appeal to Europeans and Americans who were looking for "something different, but not too different ":

> About three quarters of these handbags are bought by foreign tourists in handicrafts stores in Tehran. When they see the traditioal Iranian handicrafts they say "My how beautiful, how unique", but they don't buy because the design just doesn't fit in with their life styles. When they see my bags they see something equivalent in quality and style to what they could buy in a fine shop at home -- but at a lower price. The price is right, the label says "Handmade in Persia" and there is a distinctly unusual flair to the design. They buy it. If it were either a straight European bag or a very exotic bag I don't think they would be as interested.

Paintings and Small Leather Goods. Paintings on leather had been the distinguishing feature of Baroumand Designs' first products and continued to be something of a company trademark. The firm's painted products were unmounted paintings on leather, paintings on leather mounted on square panels for wall hangings, small jewelry and desk-top boxes covered with painted leather, and paintings on handbags. Mr. Baroumand had developed the process for painting on leather after experimenting with a number of dyes, pigments, and protective coatings. While most paintings on leather had a tendency to chip or rub off,

Mr. Baroumand had succeeded in developing a technique of painting with dyes that resulted in a colorfast and wear-resistant product. The precise formulae were a carefully guarded secret -- Mr. Tabrizi, the tannery manager, mixed the dyes himself as they were needed to keep the workers from learning the exact ingredients.

The paintings were colorful renditions of scenes from Iranian heroic sagas, palace wall paintings, portions of decorative designs and caligraphy. While maintaining some of the flavor of traditional Iranian art, these paintings and boxes had their greatest appeal to Europeans and western-educated Iranians who sought modernized Iranian decorations at a moderate price.

The company sold most of its painted leather products to the Iranian Government Handicrafts Center. Mr. Baroumand explained that sales of these products to the Handicrafts Center served to establish his company as a "handicrafts producer ":

> At first, the Handicrafts Center would only handle our products that used paintings or tribal cloth for decoration. They were eager to sell these items because they had all the characteristics one usually associates with handicrafts. The products met with an excellent consumer response, especially the handbags. Because of this strong demand it was easy to convince the Handicrafts Center to handle our other products which were less "ethnic" and more closely akin to European-style leather goods. If it were not for our paintings, we would have had a difficult time distributing our more Western products through handicrafts outlets.

Baroumand Designs also produced a line of small leather articles including belts, wallets, change holders, key holders, and suede cushions. Some of these products were the result of design experiments rather than careful planning and chiefly served to make use of scraps of leather that would otherwise be discarded. Production could be started on these items on short notice, thereby reducing the amount of time the workers were idle if there was a work stoppage on the larger items.

Furniture. Mr. Baroumand believed that his own forté, because of interests and training, lay in the design of furniture. Throughout his career he had experimented with drawings and prototype models of desks, chairs, lamps, and other furniture items. In 1971 he began to take orders and accept contracts for furniture of his own design. Production was sub-contracted -- an arrangement which was necessitated by the relatively low volume but which was not quite satisfactory in terms of cost or reliability.

Following his first order for Rls. 200,000 of furniture, Mr. Baroumand had the opportunity in 1972 to bid on a contract to supply office furniture for a new government office building. The buyers were particularly interested in leather-on-chrome plated steel frame chairs and Mr. Baroumand received the Rls. 12 million contract on the strength of his low prices on these chairs and his experience in leather work. "I priced the leather chairs at 950 rials," he said, "even though my cost per chair was about 780 rials. They couldn't turn down such a reasonable price on the chairs despite the significant amount

of non-leather furniture, like desks and tables, included in the contract."

Mr. Baroumand was convinced that the type of chrome-plated frame leather furniture which his company produced was fairly unique in Iran and could form the basis for a growing furniture business. Mr. Baroumand estimated that continuing sales of furniture could easily become a major factor in his business in the near future. At the same time, due to the unreliability of the suppliers of the metal frames and wooden table tops, he was seriously considering alternative methods of pursuing his furniture business. He explained that two alternatives seemed most feasable: (1) to sell his designs and the leather components to an existing furniture producer, or (2) to totally intergrate the production of metal and wood work into his present facilities.

Garments and Textiles. Leather garments were currently being produced in very limited quantities but Mr. Baroumand had high hopes for this line of product. In leather, Mr. Baroumand had designed a man's jacket, suede dresses and skirts, and suede shirts and blouses. Many of the suede garments were decorated with wear-resistant and water-fast patterns applied by a silk-screen process. Some experiments with textiles and textile garments were also being made.

Visitors to Mr. Baroumand's showroom had commented that the styling and workmanship displayed in the leather and suede garments was on a par with that available in fine boutiques in Europe. Mr. Baroumand stated that many European designers did not specialize in leather and that they tended to ignore the differences in cost and workability between fabrics and leather and suede. In his opinion, the use of cutters who had no experience in fabric work combined with designs that were expressly for leather gave him an advantage over most European producers. He noted that his ability to obtain quality low cost suede locally put him in a position to set attractive prices for export to the U.S. and Europe.

He further believed that his labor costs, which were low compared to European producers, gave him more freedom of design. European producers were being forced towards labor saving designs and as a result made less efficient use of their materials. Many of Mr. Baroumand's designs were purposely labor intensive. "With the rising cost of leather," he explained, "it pays for me to spend more on labor and less on leather. European producers are caught in a double bind; their labor costs are increasing rapidly at the same time that their materials costs are spiraling upward."

Baroumand Designs was also experimenting with a line of textiles printed with original silk screened patterns and with blouses and shirts made with these textiles. The fabrics were often cotton or hand-woven silk and the patterns were created by Mr. Baroumand. While a small number of blouses had been sold from the showroom, Mr. Baroumand had not yet formulated a plan for producing and selling a larger volume of textile garments. He did, however, plan to increase the rate of production of silk screened fabrics for use as garment and handbag linings and to be sold for use as upholstery fabrics and draperies.

Other Products. A number of other products were produced either occasionally or as experiments in design. Mr. Baroumand had maintained his interest in shoe design and one worker turned out a small number of shoes each month. He planned to maintain this level of production for the time being and go to a higher volume at a future date. Leather products such as desk pads and folders were occasionally made to order or for friends, and workshops were often asked to make or sub-contract the construction of bookcases, lamps and other items for which Mr. Baroumand had new design ideas.

Design

Mr. Baroumand described the concept underlying his product designs as follows:

> Quality leather goods are expensive and are going to become even more expensive. When people buy something made from leather they want it to be elegant and smart and something that they can use for three years and not go out of style. We could easily produce more eye-catching things but we would rather be known for style and elegance and avoid trying to follow the "fad" crazes which change every few months.

Original design work was done by Mr. Baroumand and Mr. Bedani would often develop and adapt the designs for production. Prior to joining Baroumand Designs in 1971, Mr. Bedani had been working in England as a pattern designer for a large wallpaper manufacturer. While his official title was Assistant Art Director, Mr. Bedani worked very closely with Mr. Baroumand in most areas of the business. Although Mr. Baroumand specialized in leather and furniture design and Mr. Bedani generally did the textile designs, they continuously discussed designs with one another and helped each other work out ways of making products easier to produce.

One important factor influencing the design of the company's leather products was the generally poor quality of Iranian hides and skins. Animal skin diseases, the effects of thorns and branches, and poor flaying practices all contributed to the holes, scars and discolorations that affected Iranian leather. To produce high quality leather products at a reasonable cost from the locally available hides Baroumand Designs had developed special leather finishing and design practices.

Mr. Baroumand described the finish on his non-suede leathers as "antiqued" and was convinced that the resultant product was superior for many purposes to expensive grades of fine Italian and Spanish leather:

> Using normal finishing processes we would never be able to produce leathers with consistent even coloration, batch after batch, as European and American producers can. We found, however, that by repeating a sequence of dying, lacquering, and crushing operations three or more times on each skin we were able to come up with a mellow antique look. The leather takes on a variety of subtle shades

that blend into one another -- it looks like fine old leather that has been waxed and taken care of for a century. The great thing about this finish is that minor flaws in the hide add to, rather than detract from, the look of the final product.

I know that a number of European producers have tried to develop similar processes for lower grades of leather but the technique is so labor intensive that nowadays it is prohibitively expensive for them.

Most of the other local producers of leather goods resorted to "pigmented" finishes to cover the flaws in the leather. While this process did hide the natural defects, it gave the product a heavy, shiny synthetic look.

Maximizing leather usage was a concern of all leather goods producers. Since skins were not of uniform size and shape, there was always waste in leather goods production. The problem of leather usage was, however, particularly acute for Baroumand Designs; although the antiquing process took care of minor flaws, almost every skin had one major flaw which had to be cut out of the leather. Since the location of such flaws was unpredictable, deciding how best to use each skin was a difficult process.

Mr. Baroumand tried to minimize wastage both by hiring skilled leather cutters and by creating designs that called for smaller individual pieces. While he considered cutting efficiency to be less important than style, many of Mr. Baroumand's products used the patterns created by the sewing together of many small pieces of leather as an integral part of the design. For example, Baroumand Designs' popular leather jacket was made from 35 separate pieces of leather which were placed in arrangement that gave a "custom fitted" rather than patchwork look. In the same vein, a recent redesign of the suede trousers pattern had reduced the number of skins used per pair by one-third.

Sales and Marketing

All sales activities were handled by Mr. Baroumand. The company's policy was to produce only in response to orders from its clientele although a small inventory of finished goods was maintained in the showroom for viewing by prospective customers and sales to friends and acquaintences. Baroumand Designs had not as yet advertised its products.

The largest customer for Baroumand Designs' handbags, paintings, and small leather goods was the Iranian Government Handicrafts Center which accounted for 62% of sales of these products during 1351. The Handicrafts Center was a government owned business with 6 retail outlets located in shopping districts and hotels in Tehran and 6 retail outlets in provincial cities in Iran. The stores were modern and catered mainly to tourists. The Handicrafts Center was also in the process of opening a retail store in New York. To date, only small samples of Baroumand Designs' products had been sent abroad by the Handicrafts Center. The Government Handicraft Center retailed its merchandise at 30% above its cost. The remainder of the sales of

handbags and small leather goods were to other (privately owned) handicrafts stores and clothing boutiques in Tehran. Mark-ups-in these outlets were usually between 30 and 40 per cent.

All of the company's clothing production had been sold through its own boutique on Iranshahr street until it became clear that it was impossible to keep an adequate inventory in the store until production difficulties were solved. The boutique was closed at the end of 1351 and limited sales of clothing were thereafter made through the company showroom.

Pricing. A number of factors were considered in establishing the price of a new product. According to Mr. Baroumand, his general procedure in pricing was to at least double the estimated direct cost of producing a product. If uncertainty about cost was high or if demand was expected to be unusally strong, the price might be set as high as three times estimated direct cost. Certain items in each line, however, were priced at much lower levels. Mr. Baroumand explained his strategy as follows:

> I try to price certain items almost at cost in order to develop the market and protect the rest of my line. In the case of the furniture contract, I used the leather chairs as a selling item in order to get the experience in furniture as well as the profit on the other parts of the contract.
>
> The same thing is true for some of our handbags. I made my name on the hand paintings that are used to decorate some of the handbags. Now, there have been a number of people who have tried to copy these handbags and compete with me directly. What they don't know is that I sell these at very low margins and make my money on the other kinds of handbags. Even if they knew the secrets of the colorfast dyes used in the paintings, they are doomed to failure because they can't compete with our prices on these items.
>
> I'm not so worried about competition with my other products because they depend on expertise in design and particularly in specialized leather design. I can confidently say that no one else in Iran has this expertise and, while they may be able to copy us, we will continuously be coming out with new designs and keep several steps ahead of them.

Mr. Baroumand stated that sales of his better handbags were not very sensitive to price. He explained that styling and workmanship were much more important than the price of such products. The business implications of this fact had recently become much clearer due to efforts to develop data on unit costs:

> I have recently discovered a very interesting thing -- here are two bags, one selling for 800 rials and one for 1500 rials. The more expensive bag obviously shows much more attention to design detail and more careful hand finishing, yet the difference in direct cost is only 100 rials! You see, the difference is almost all due to labor which is relatively inexpensive here compared to materials.

> This is a concrete example of how good design and skills in breaking a production job down into simple parts yields a high return. I am no longer making the cheaper bag.

Export Plans. Mr. Baroumand believed that the local market for fine leather work was fairly limited and expected most of his future growth to come from exports:

> There are just not enough well-to-do-Iranians and foreign shoppers in Iran to support the kind of business I want to build. I see our local sales as "practice" -- they give us design experience and help to build up our ability in production. But over the long term I am just not terribly excited about selling in Tehran.

The optimism with which Mr. Baroumand looked to the export market was based on both early indications of the marketability of his products and the general trends in the world leather trade. Exhibit 5 shows Mr. Baroumand's rough estimate of sales for the years 1352 to 1354.

In October, 1972, the United Nations Development Organization (UNIDO) sponsored an international handicrafts show in New York. Mr. Baroumand attended and exhibited his lines of paintings and handbags. The handbags excited a good deal of interest among leather goods buyers and several agents tried to negotiate terms for large orders. He was not able to accept any of these orders because the quantities involved (one agent requested 100,000 bags) were well above his production capacities and because many of the buyers, although enthusiastic about his designs, were interested in less expensive bags. Mr. Baroumand was convinced that the price issue was not a real problem:

> A lot of these agents and large stores are used to buying handbags in, say, Lebanon for $3 and retailing them in the States for $8 to $10. When these buyers want me to produce for them they really want me to set up a factory to use cheap Iranian labor to make cheap bags for them. This just isn't going to happen. First of all, I don't want to be that kind of producer. Secondly, and more basically, leather is rapidly becoming more and more expensive; world prices have more than doubled in the last two years. People are going to move to synthetics for cheap bags and real leather bags are going to be very expensive. This, in turn, means that you will no longer be able to go to the market with very plain things-- you will have to put much more design into the product to make it appealing enough to justify the higher price. When you put all of this together you can see that our low labor costs combined with quality design and workmanship put us in a enviable position.

Baroumand Designs' exports to date had consisted of direct sales of handbags to boutiques in Europe and California. In each case the buyer had been a person Mr. Baroumand had become friendly with either during his days with Chelsea Cobbler in London or on trips to the United States. In addition, a

small amount of his products had been sold in La Maison de l'Iran, a privately owned Iranian handicrafts emporium in Paris. Although Mr. Baroumand had no objection to such channels, he hoped to arrange a more formal method of distribution once the company's production rate permitted sizeable export orders. A number of agents in Germany, Italy, and the United States had shown interest in handling his products, but Mr. Baroumand was hesitant to make definite arrangements without a better feeling for what his volume production costs would be. "My plan," he explained, "is to develop agents, perhaps one in New York and one on the Continent, who specialize in selling to boutiques. Once our factory can produce, say 400 bags per day we can begin to build up a market, gaining publicity through relatively exclusive distribution to fine shops." By not selling to large chain stores and mass clothing retailers Mr. Baroumand hoped to gain a prestige image for his products and to avoid the problems of large single orders and heavy pressure on delivery schedules.

In order to stimulate export sales Mr. Baroumand was considering a policy of having special export prices of about 10% below his local factory prices. Since the final retail price in the United States, after adding shipping, duties, handling, commissions and retail mark-ups, could easily be three times Baroumand Designs' ex-factory price, this discount might have a significant impact on the marketability of the firm's products. Mr. Baroumand explained that "in effect, I hope to use the local market to finance breaking into the export market. Once our production problems are settled and we gain a better understanding of our competitiveness abroad we can adjust our designs and prices to provide a more normal margin."

One problem which worried Mr. Baroumand, but which he realized he could do little about, was Iranian government policies regarding exports. As part of a program to develop foreign exchange earning export businesses, the Iranian government had taken steps to provide export subsidies and rebates in duties charged on imported materials to manufacturing firms that developed export businesses. Unfortunately, this policy only applied to "manufacturing industries", normally defined as those businesse which had been licensed as such by the Ministry of Economy. Unfortunately, Mr. Baroumand had been told by a government official that his business was a "handicraft" operation and could not qualify as a "manufacturing enterprise."

Manufacturing

Baroumand Designs' office and manufacturing facilities were located in two separate buildings in the heart of Tehran's modern commerical district. On Rasht Street the company rented space that was used for Mr. Baroumand's office, a showroom, a stockroom, the company's leather shop, textile printing shop and a painting sudio. About three blocks to the north the company had rented a three-storey seven room house that had been converted to a workshop building. Located here were the firm's handbag, garment, box, belt, and furniture assembly workshops together with the offices of the workshop manager. Space was at a premium in this facility and the courtyard and been used to erect a canvas covered storage area for furniture frames and the porch was used for furniture assembly. Because of the lack of a telephone in the workshop building, all communications with the company's offices had to be carried by messengers. Exhibit 6 shows the floor space allocated to each workshop activity and the number of full-time workers employed in each.

While lack of additional floor space was the most important of the factors that prevented Baroumand Designs from immediately increasing its level of production, the time required to train workers in special skills also constrained production volume. This latter factor was most important in the painted products and garments lines. Although the assembly of the painted boxes was a simple operation, raising the level of production was difficult because the work skills needed were not widely held and the job itself was very time consuming. In the recently begun garment workshop there were still numerous problems to be solved before the workers would be experienced enough to produce more than samples. According to Mr. Baroumand:

> Once we have solved our problems with bags we will divert our efforts to clothing. Right now our garment side is just training and they are still making a lot of mistakes. The other day, for instance, they made a bunch of men's trousers with the fly going in the wrong direction .... it's a good thing that it wasn't an order for 20,000!

Supply: Approximately 90% of the company's needs for leather and suede were processed from calf and kid skins. Buying raw calf skins from local dealers or commission agents was a problem because very little grading was done and one generally had to accept large lots which included cow as well as calf. For this reason, Mr. Baroumand had negotiated an agreement with a privately owned tannery for the supply of pre-sorted, semi-finished calf skins.

The company did purchase raw kid from collectors and commission agents at a current average cost of 58 Rials/sq.ft. These skins were processed into suede and semi-finished kid at another small Tehran tannery. Mr. Baroumand had been instramental in helping this tannery train its workers and Baroumand Designs maintained a close working relationship with the tannery, using 90% of its total output. Baroumand Designs supplied the tannery with raw skins it purchased on the local market and was charged 14 Rials/sq. ft. for suede processing and 8 Rials/sq.ft. for the processing of semi-finished leather. The current Tehran wholesale price for suede comparable to the highest quality received from this tannery was 110 rials/sq. ft. and Mr. Baroumand estimated the same suede would have a wholesale value of approximately 90 rials/sq. ft. in the European Market.

Despite the apparent savings, Mr. Baroumand was not entirely satisfied with the arrangement. The main problems, he explained, were that the quality of the work done at the tannery was unreliable and that for reasons outside his control it was unlikely that the tannery would be able to expand its output. Furthermore, since Baroumand Designs paid for the raw skins and supplied them to the tannery, it also took all the risk of losses caused by damage during the processing. Mr. Baroumand estimated that approximately 30% of the leather and suede from this source was damaged when received. Kid leather and suede were primarily used to produce clothing. While still usable for other types of products, some of which had been designed specifically for this purpose, the damaged skins had considerably lower market value and were not suitable for the production of clothing. Mr. Baroumand was convinced that he needed greater control over the early stages of leather processing and had been considering the possibility of acquiring or building a tannery.

While suede was received in finished form, all non-suede leather was received semi-finished -- that is, tanned with the preliminary surface finishing complete. The company dyed and performed the final finishing on this leather on its own premises. Mr. Baroumand felt that it was essential to retain control over these final finishing steps as much of his leather product's final value depended upon his special "antiquing" process and on careful color matching in products that required leather from more than one individual skin.

The company's most serious supply problem was the instability of skin prices. In addition to the usual seasonal fluctuations in skin prices, there had been a rapid overall increase in hide and skin prices of 100% or more in the last year (see Exhibit 7). During 1351 Mr. Baroumand had signed a long term contract for the production of leather furniture. The rise in leather costs had seriously reduced the profits realized form this contract and Mr. Baroumand stated that price uncertainty had made the whole industry very cautious with regard to longer term contracts. However, in June 1973, (Tir 1352) Mr. Baroumand decided that prices had reached a plateau and again began to contract for three to four months of production in advance.

In addition to securing a flow of leather at a reasonable price, Baroumand Designs also faced the problems of dealing with outside workshops to obtain chrome plated frames for furniture, wooden boxes and backings for the leather boxes and paintings, and some of the special clasps and decorative trim for handbags. Mr. Baroumand had never been satisfied with these sub-contracting arrangements. The wooden boxes and backings were often made from poorly aged wood and warped out of shape. The metal furniture-frames were not straight causing one leg to be short. The chromium plating was often chipped or cracked. It was practically impossible, he explained, to get a subcontractor to take back goods that did not meet specifications.

In addition to these problems, subcontractors would not meet delivery dates. They usually required that Baroumand pre-pay a portion of the cost of goods and used this money to finance the manufacture of goods for other customers. Mr. Baroumand had expended a great deal of time and energy trying to find sub-contractors that could meet his requirements, but in the end decided that he would eventually have to bring the production of these items in-house. It was found that space was available to do the bending of the furniture-frames and the decision was made to set up the necessary equipment, but further integration would have to be delayed until more space was available.

Workshop Management

Overall coordination of workflow and production planning was done by Mr. Baroumand and Mr. Bedani. Mr. Tabrizi, the tannery director, was responsible for leather dying, finishing, and cordination with the tanneries and Mr. Sadeghi, the newly hired production manager, was in charge of supervision and control of all production activities in the workshop building.

Mr. Sadeghi had been hired in April of 1973 to replace a man Mr. Baroumand had fired due to his dishonest practices. Mr. Baroumand commented:

> The former workshop manager wasn't as competent as he should have been. We were doing time studies to get cost figures and I don't know whether he just didn't want to make the effort or if more was involved, but he continuously came up with the wrong figures. Then I started realizing the extent of the corruption and the stealing that was going on in the workshop. He and the workers were milking the system for all they could get. The foreman was giving us figures for overtime work that hadn't been performed and splitting it with the workers. There was theft of supplies and finished products. Workers were slashing good pieces of leather and throwing them in the garbage.
>
> The purchasing officer was playing games too. He was buying on credit and using the cash we were giving him. We also found we were over-paying for supplies, ordering 350 handbag clasps and receiving only 250.

Mr. Sadeghi had no previous experience in leather production or management. Trained as a draftsman in the army, he had worked for several years as an accountant and just prior to coming to Baroumand Designs had been working in the warehouse of a large manufacturing company in Terhan. Despite his inexperience, Mr. Baroumand believed that Mr. Sadeghi had the qualities needed to quickly adapt to his new responsibilities. After he had been on the job for a month, Mr. Sadeghi commented on his plans and the problems of the present facilities:

> One of the first tasks I set for myself was to raise production output in the present facilities. The real limiting factor is space and there is really only so much that can be done. I have decided to use the hall just outside the present handbag shop and by doing that I'll be able to raise the number of workers in that section from twelve to fifteen. Along with some improvements in production methods I should be able to raise our output from the present 30 bags per day to between 45 and 50 bags per day. The latter is the limit for the present facilities unless I take space away from some other section.
>
> If we are going to raise production significantly we will have to move to a larger location. I hope to have most of the production problems ironed out here before we move and then just expand the size of the operation in the new location.
>
> Tezzy (Baroumand) has had to spend too much time on day-to-day problems with workers, supplies, and a host of other things that should never even reach him. I have known Tezzy for years socially and have often visited him while he was working and so I'm familiar with a lot of the problems he's been having. When I took the job, I told him I would only do it if I would be given full responsibility

for the workshop. I think he gave a little sigh of relief as he agreed to my terms.

Production Costs. Baroumand Desgins did not have a formal cost control system so that detailed information on product costs and labor productivity was not available to management. However, Mr. Baroumand was convinced that it would be dangerous to expand production without a better knowledge of costs and he had conducted a short term survey of the time workers spent on various production tasks. The results of this survey were used in arriving at the cost computations shown in Exhibit 8.

Baroumand Designs' labor force worked 9 hours per day, five and one-half days a week. All workers received a flat hourly wage and there was no incentive system. Mr. Baroumand wanted to devise an incentive system but realized that it was necessary to implement cost and production control systems first. Unskilled trainees generally received 100 rials/day and sometimes slept in the workshop building. Skilled workers received about 350 rials per day and a cutter/foreman received between 650 and 700 rials per day. The mix of unskilled to skilled workers was such that in the 14 man handbag workshop group, for example, the average daily wage was 230 rials per man.

The Karadj Project

Mr. Baroumand planned to build a new facility in the Karadj area (about 40 km. from Tehran) and move all of Baroumand Designs' leather finishing and workshop activities to this location. He had already purchased 5000 m^2 of suitable land at a cost of Rls. 800,000 and estimated that the construction of the necessary buildings would cost an additional five to six million rials.

The plan was to first build a new leather finishing plant on the site. This building would provide 300 m^2 of floor space. In the next phase of the project another building with 250 m^2 of floor space would be constructed to house workshop activities. This building was to be designed in the form of a single large hall and any future expansion would be accommodated by building similar buildings on the site. Production of bags and boxes would be the first activities to be moved to the new building, next garment production would be moved and finally furniture. The company would retain its offices and showroom in Tehran.

Mr. Baroumand saw the move to Karadj as solving two major problems: The lack of space for expansion in the present facilities and inadequate availability of unskilled labor in Tehran. Mr. Baroumand estimated that he could double his rate of current handbag production simply by adding ten unskilled or semi-skilled workers. By placing unskilled workers in such jobs as glueing, folding, and assembly work he would free-up the skilled workers he now often had to use for such tasks to work on jobs more appropriate to their skill levels. Eventually, Mr. Baroumand hoped to employ about 80 workers in the new Karadj facility and expected the production rate of handbags, for example to increase form 40 to over 100 per day, (together with 200 to 300 small leather items from scraps per day).

Both Mr. Baroumand and Mr. Sadaghi expressed some concern over the number of the firm's present cadre of skilled workers who would move to Karadj. Mr. Sadeghi estimated that eight or nine of his twenty-three workers were currently ready to move to Karadj with the company but that the others were not sure. He emphasized, however, the importance of not pressing any worker to move: "Once these workers get the idea that we really need them they will consider themselves as indispensible and make ridiculous demands."

Looking to the Future

In commenting on his plans for the future of Baroumand Designs, Mr. Baroumand stated:

> There are a lot of pressures on this buisness to expand -- and expand rapidly. Recently I've been trying to decide how to respond to these pressures. One difficulty is resisting the alternative of producing lower quality, mass produced cheap leather goods. I am convinced the trend in the industry will be away from cheap goods made from genuine leather. We want to keep ourselves focused on a business built on quality designs and use the high skill level of Iranian craftsmen.
>
> The way the company has been organized is going to result in a lot of problems as we expand. Right now, I have to be here for anything to get done. I don't want to build a one man empire. One of the biggest challenges will be changing over to an organization that can function on its own. The move to Karaj will force us to face up to these problems.

Exhibit 1

BAROUMAND DESIGNS (A)

Balance Sheet as of March 22, 1973

(Thousands of rials)

ASSETS

Cash	168
Accounts receivable	1500
Inventories	
Finished chairs	3240
Raw materials	1560
Total inventory	4800
Total current Assets	6468
Fixed Assets	
Land (Karaj)	984
Equipment (net)	720
Key money & deposits	1320
Total fixed assets	3024
Total Assets	9492

LIABILITIES

Accounts payable	
Suppliers	72
Notes to friends	1440
Other notes and overdrafts	1920
Total payables	3432
Advances on contracts	1320
Short-term bank loan	840
Total current liabilities	5592
Capital	3000
Surplus	900
Total equity	3900
Total liabilities	9492

Exhibit 2

BAROUMAND DESIGNS (A)

Sales by Product

(Rials in Thousands)

	Last 8 months 1350		1351	
Handbags	2,616	42.5%	7,052	29.2%
Paintings, boxes, belts, etc.	774	12.6	1,463	6.1
Special contracts	600	9.8	1,200	5.0
Garments	--	---	960	4.0
Furniture	1,680	27.3	13,200	55.3
Finished leather	480	7.8	---	----
TOTAL SALES	6,150	100.0%	23,875	100.0%

Source: Company records

Exhibit 3

BAROUMAND DESIGNS (A)

Organization Chart

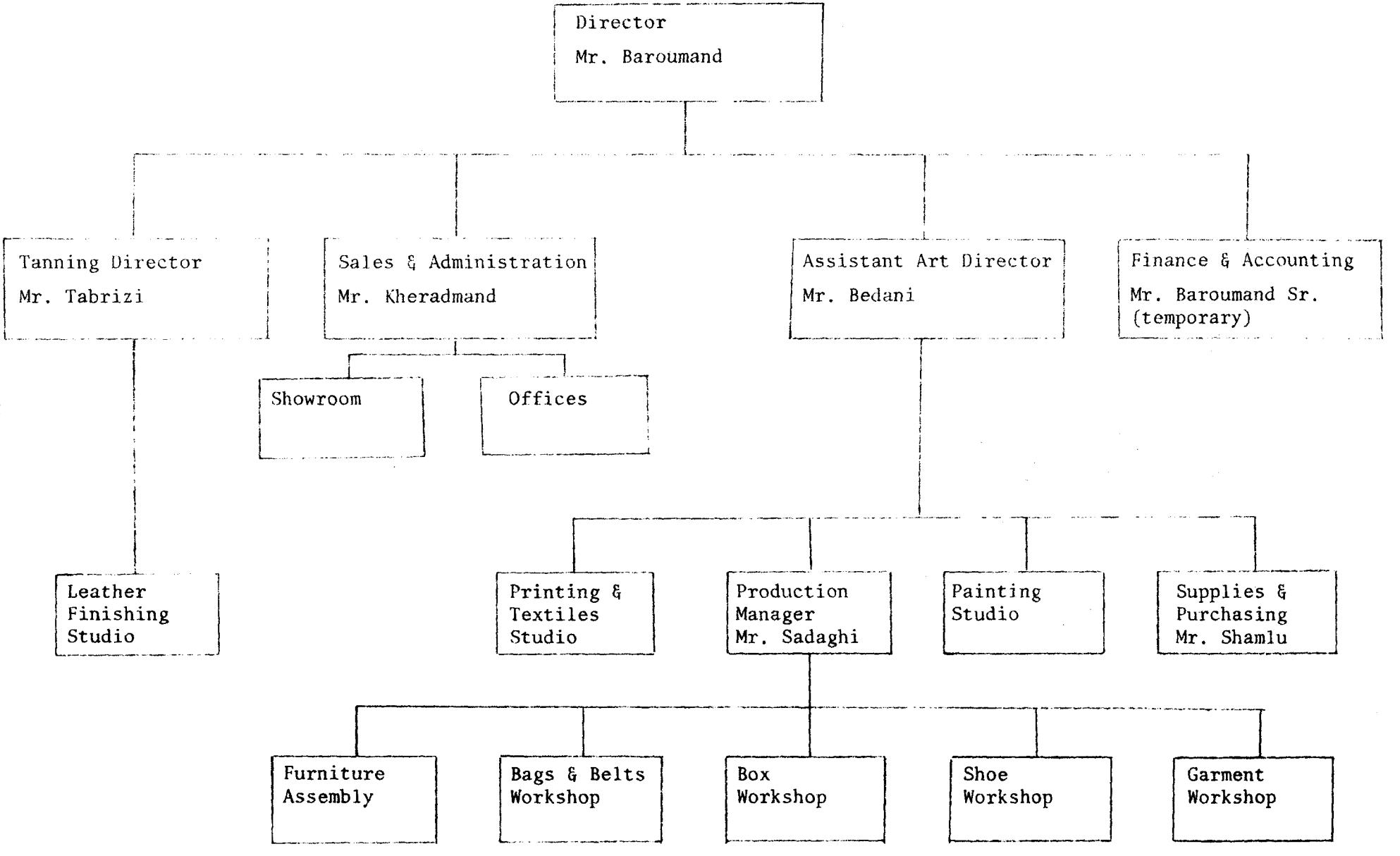

Exhibit 4

BAROUMAND DESIGNS (A)

Analysis of Sales
(rials in thousands)

	1350 (last 8 months)		1351	
	Amt.	%	Amt.	%
Handbags, paintings and boxes[1]				
Gov't. Handicraft Center	2069	34	6000	25
Kourosh (Dept. store)	1010	16	115	--
Zinatsara (Handicraft store)	---	--	960	4
Other local shops	311	5	240	1
Export	---	--	1200	5
Total bags, paintings and boxes	3390	55	8515	36
Garments[2]	---	--	960	4
Leather folders and misc. contracts	600	10	1200	5
Furniture	1680	27	13200	55
Finished leather	480	8	---	--
TOTAL	6150	100	23875	100

[1]Mr. Baroumand estimated that 80% of these sales to shops consisted of handbags. All of the export sales were of handbags.

[2]Garments were sold through the company's own retail outlet during the last 6 months of 1351.

Source: Company records

Exhibit 5

BAROUMAND DESIGNS (A)

Sales Forecast: 1352-1354

	Thousands of rials		
	1352	1353	1354
Handbags, boxes, paintings, and other small leather goods	15,600	27,600	36,000[1]
Garments	6,000	12,000	18,000
Folders and misc. contracts	1,440	1,728	2,074
Furniture	6,000	12,000	15,600
TOTAL[2]	29,040	53,328	71,674

[1]Mr. Baroumand estimated that by 1354, 60% of sales in this category would be exports.

[2]This total does not include sales of finished leather and textiles. Mr. Baroumand estimated that if the company were to enter the leather market directly sales in this area would be about Rls. 24 million by 1354. He also estimated that if the company entered the curtain textile business sales would be about Rls. 2.4 million by 1354.

Source: Prepared by casewriters from data collected in interviews

Exhibit 6

BAROUMAND DESIGNS (A)

Allocation of Space and Workers to Production Sections

	Work and Storage Space (sq. meters)	Workers Full-time	Workers Part-time
Workshop Building			
Furniture assembly	30	1	--
Garments	22	4	1
Handbags	22	13	--
Boxes, belts, and shoes	15	3	1
Furniture frame storage	40	--	--
Office and inventory	10	--	--
Headquarters Building			
Leather finishing plant	100	4	--
Painting studio	15	--	4

Source: Interviews with management

Exhibit 7

BAROUMAND DESIGNS (A)

Hides and Skins Price Behavior

Iranian Price Indices:

	March 21 1971	March 21 1972	March 21 1973
Sheepskin (Tehran)	100	122	243
Sheepskin (Provinces)	100	165	292
Goatskin (Tehran)	100	106	275
Goatskin (Provinces)	100	114	257

United States Wholesale Prices:

	Dec. 1971	May 1972
Goatskins ($/dozen)	18.00	18.00
Sheep and lamb skins ($/doz.)	19.50	23.50
Calf skins ($/lb.)	.32	.58

Source: Tehran Economist and U.S. Government data on wholesale prices

Exhibit 8

BAROUMAND DESIGNS (A)

Cost Breakdowns of Three Typical Products

Ladies' Handbag:

Factory price	1500 rials
Direct manufacturing cost	not available
Components of direct cost:	
Purchased semi-finished leather	50.0%
Leather finishing operations	10.0
Cardboard, clasps, etc.	15.0
Labor[1]	25.0
	100.0%

Suede Mens' Trousers:

Factory price	3500 rials
Direct manufacturing cost	2184
Components of direct cost:	
Purchased raw skins	1276
Processing (local tannery)	308
Zipper and other materials	100
Labor[2]	500
	2184 rials

Leather on chrome-steel chair (bulk orders):

Factory price	1350 rials
Direct manufacturing cost	1010
Components of direct cost:	
Purchased semi-finished leather	500
Finishing operations	100
Metal frame	200
Wood seats	60
Misc. parts	30
Labor (leather fitting and sewing)	100
Labor (final assembly)	20
	1010 rials

[1] Management estimated that labor costs on ladies' handbags could be cut by about one-third under conditions of high volume production. Hand painting on bags increased the labor cost per bag by about 150 rials.

[2] Management estimated that labor costs on trousers could be reduced by about 15% to 20% under conditions of volume production.

Source: Interviews with Mr. Baroumand

Exhibit 9

BAROUMAND DESIGNS (A)

SAMPLE OUTLINE DRAWINGS FOR PAINTINGS ON LEATHER BOXES

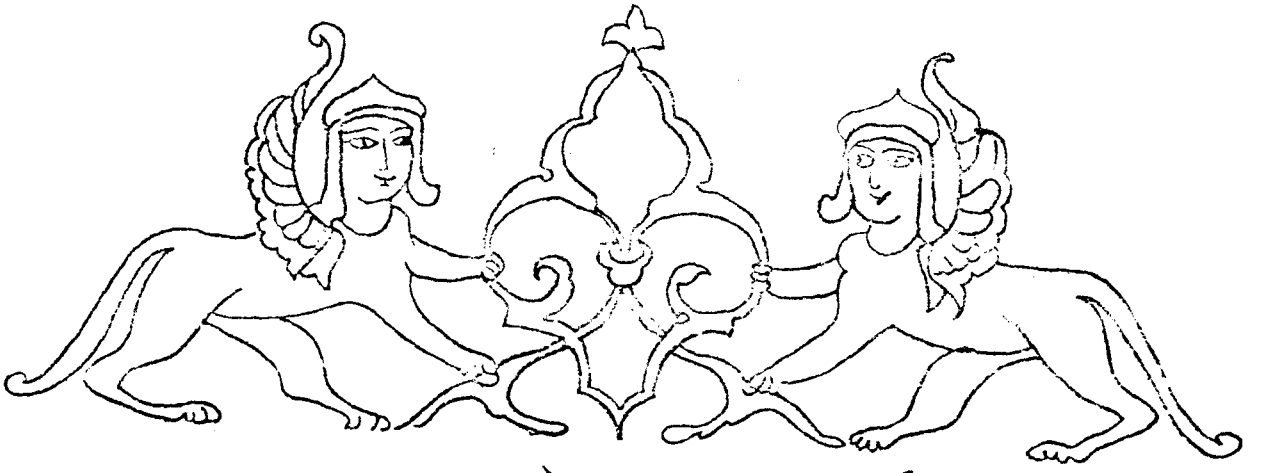

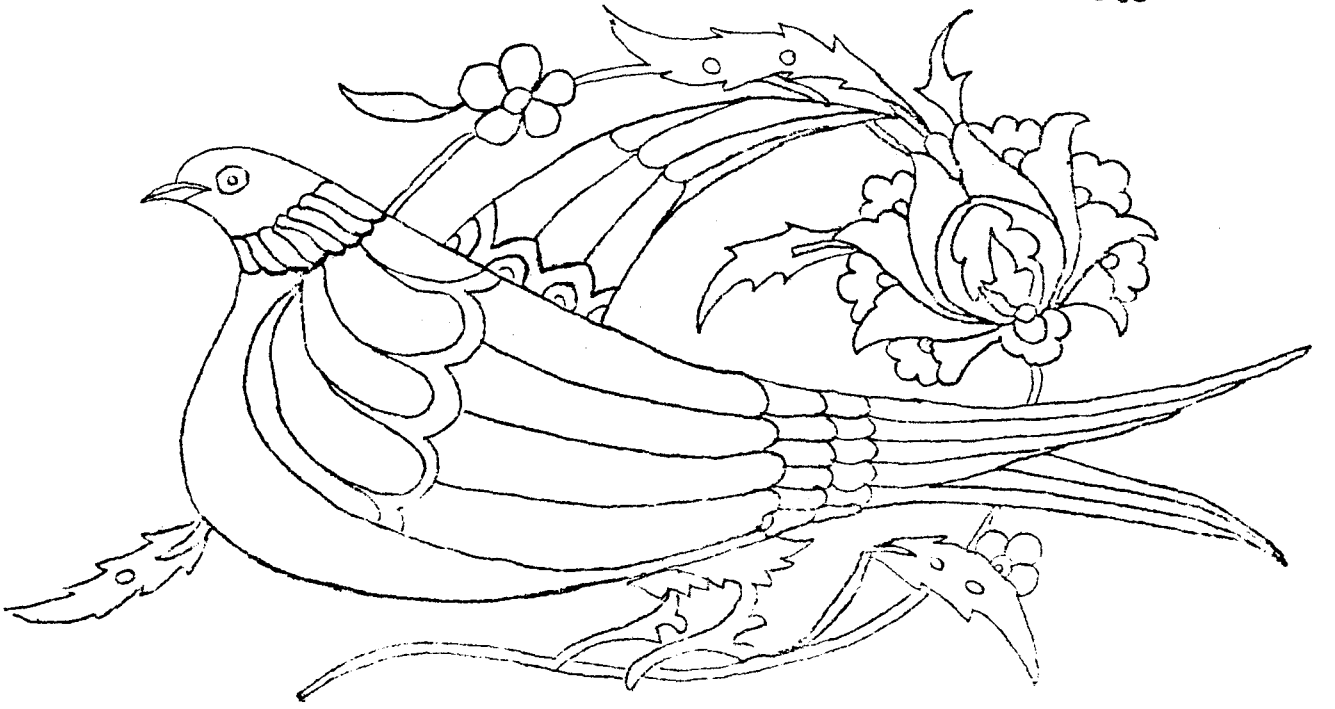

BAROUMAND DESIGNS (B)

The Baroumand Designs (A) case surveyed the history and situation of the company up until July 1973. After completing this case the researcher from the Iran Center for Management Studies visited Mr. Baroumand in November 1973 to determine what progress had been made. Excerpts from that interview follow:

Researcher: Its good to see you again Tezzy. How have things been going? Have you made any progress on the move to Karadj?

Baroumand: Well, we are still planning on it but I have had so many problems here lately that I haven't had time to work on it very much. I didn't even get to make that trip to New York to see buyers.

Researcher: What kind of problems have you had?

Baroumand: Oh, very severe ones. I even had to call the police in. You see, I discovered that my managers and workers had been systematically stealing from the company. They were taking finished products that had not yet been stamped with the Baroumand label and selling them to local stores on their own.

Researcher: Had this been going on long? How did you find out about it?

Baroumand: Oh, one of the stores called me and said that these people had been by trying to sell my products. They had been offered lower prices on the merchandise and they were told that they could "get as much as they wanted at these prices." I had suspected for a time that something was going on -- I have these work order sheets that workers are supposed to fill out when they finish a job. Often I would ask where the "50 belts" I had asked to be made were and nobody knew. The work order sheets were never filled out. It is all very depressing. You just can't trust anybody. I have to watch each and every detail of the business myself.

Researcher: Why do you think that this kind of stealing has picked up lately?

This material was made possible through the cooperation of Baroumand Designs. Certain names and figures have been disguised. This case was prepared by Case Research Assistant Donald C. Croll and Assistant Professor Richard P. Rumelt to serve as the basis for class discussion rather than to illustrate either effective or ineffective handling of an administrative situation.

Copyright © 1974 by the Iran Center for Management Studies

Baroumand: It's very simple. Mr. Bedani had this idea about going into business on his own. For the last six weeks he went around asking everyone if they wanted to quit working for me and come in with him. He thought I didn't know what was going on. Finally I called him in and said "You have asked everyone else to work for you, why haven't you asked me?" Then I fired him.

Researcher: What are you going to do now?

Baroumand: I just don't know. You can't work with these people. I have failed to make them take any pride in their work. I don't like to admit that I have failed in this but I have. I have tried to convince them that this is not a little shop like they are used to -- that we have a great future. I say "you are not the same people as you were when you worked in a little shop. We create products here. We strive for quality. Even the Empress has worn the products you make." This just doesn't impress them.

You know, when I first talked to you I had this very idealistic plan. I said that Iran had very distinctive skills in leather work -- that all that was needed was to combine good design with skilled labor. Do you remember how I said that Melli Shoe's policy of using machines and unskilled labor to make mediocre products was stupid? Well, now I am not so sure. What good is a pool of skilled labor if no one can work in a group? I am afraid that in this country we have individualism carried to ridiculous and destructive extremes. It just may be that the only kind of industry that can flourish in Iran is based on machines and unskilled labor. To create businesses that are based on human skills requires a certain amount of dedication and self control. I just don't see that happening.

In the long run I may leave all this and move my production shop to Morocco or Greece or somewhere where people take some pride in their work.

* * * * * * * * * * * * * * * *

Baroumand: Look, corruption is just one part of the problem. The real issue is that no one feels any responsibility towards the company or towards their work. Take, for example, my bag production shop. Last summer I tried to change things but met with terrible resistance.

Researcher: What kind of changes were you trying to make?

Baroumand: My bag shop was basically a single small work group. Now, most Western bag plants expand by going to a production set-up like this (points to diagram shown in Exhibit 1). This is a plan endorsed by the U.N. and recommends that you group together work stations for cutting, stitching, and assmebly. This plan, however, is not very good for my purposes. It doesn't let you

identify who is doing what and you can't control cutting value.

For quality work I would like to go to this kind of a shop organization (draws diagram shown in Exhibit 2). Here you have one foreman for the whole shop and a cutter in each separate work group who acts as a group foreman. Each group has a number of stitchers and assemblers --enough to absorb the single cutter's output. Then there is one small group that uses scraps to make small items like key holders. With this kind of set-up you can easily indentify where mistakes are being made and you can control cutting value by looking at the leather you give the group in relation to its output.

Most importantly, you get a healthy competitive atmosphere when you break the work into small groups like this. Eventually, I would like to have each group act as a sort of small independent shop -- I sell them materials and buy their output. Of course, this has to wait until we have a decent cost system and until the workers get used to a group set-up like this

Now, what I wanted to do this summer was break my single work group into two groups. Some of the men in that group were doing work way below their skill level and I wanted to upgrade them and hire more apprentices. I wanted to take Ahmad, my cutter, and make him foreman over both groups.

Researcher: Who fought the change?

Baroumand: Both Ahmad and the workers. You see, Ahmad is one of the best men I have but he just doesn't understand what it means to have a business rather than a small shop. I say, "Ahmad, next year we want to turn out three times as many bags each day -- we have to expand and you have to become a leader and teach others how to do this work." He says, "No. I will cut all the bags you want myself." He thinks that I am trying to trick him -- that I will hire another cutter and then when he is no longer a cutter I will fire him!

Researcher: What happened?

Baroumand: The next day I found that the workers were not working. Bag production had stopped. They said Ahmad had told them not to work. They have this stupid loyalty to the foreman. Finally I told them "If this is how you are going to act I don't want any of you. I don't care if we don't make a single bag. Either you work for me on my terms or not at all." Then I told Ahmad to take a walk for a day. That seemed to solve the problem for a while. When Ahmad retuned he expected to see work still stopped but he found that we had formed the two work groups and he seems to have accepted it. Still, there is no group spirit.

Researcher: Have you tried to use piecework wages rather than a flat daily wage?

Baroumand: It wouldn't work in this business. I tried it when I first started but decided it was wrong. There are several problems with piecework. You see, we want to be able to control the quality of the work -- we are making specialty products and always introducing new products. They would want to do the whole job themselves if they were on piecework -- they would do it fast and sloppy. You wind up having to accept whatever the guy makes. He makes an inferior product and wants his usual piecerate. He is not very intelligent and doesn't understand that you can't pay him for products that are not up to standard.

Also, you get problems due to material commitments and tools. Who gets the best leather? Workers fight over tools and supplies.

On a piecerate system the worker comes to work only when he needs the money. A man will take two days off and then come in and expect everything to be fine. "I will make it up" he says. The piecerate makes them think they can work as fast or as slowly as they please.

No, piecerate doesn't work. We pay them a flat wage and don't let them make mistakes. In the future I might try to install a system where a whole workgroup gets an incentive payment, but there are still many problems with that idea. If the workers had any sense of responsibility it could work; but most of them just want to get as much out of you as they can and care nothing for what they produce.

The only place I do use piecerates is in the painting studio. I tried to set it up with a flat wage system. But many of the painters are students who work part-time and sign in and out. They simply tried to cheat me. They would spend the whole time on the telephone and sign each other in and out. It is distressing but the people with the most education seemed to be the worst offenders.

Researcher: But it looks as if you did manage to get the bag shop split into two work groups. Is that working out?

Baroumand: It is and it isn't. Sure they produce bags, but I have to spend all my time dealing with their resistance to any new thing. We tried to set up a social insurance system and got a regular explosion in the shop.

Researcher: What happened?

Baroumand: I wanted to sign them up with the government's social insurance system. The rule is that the worker pays 5% of his salary and the company pays 13%. In return they get benefits to cover medical costs and other things. I told them "Look, you are getting an average flat fee that includes holidays. I want to change this

and have you insured with social insurance, give you proper overtime wages and an across the board 15% wage increase for everyone."

They fought it. Its crazy. They just don't want to have the insurance and pay the 5%.

Researcher: Why not?

Baroumand: What they really want is for me to pay the 18% directly to them. They say they will insure themselves. Sure! Then if they get sick they will blackmail me into paying the costs.

Researcher: Given all the problems, might it not make sense to set some of these people up with private workshops and sub-contract the work? Or, just use existing workshops as subcontractors?

Baroumand: No, that is absolutely the wrong way to go. About three years ago I tried subcontracting shoe production. I went to Rasht and found a man who did very fine handmade shoes in his shop. He was almost broke and I offered to set him up. I supplied him with materials on credit and promised him large orders and a bright future. In return I would get shoes at one-half the Tehran cost. Well, when I went back I found he was selling the shoes locally rather then ship them to me. Then he disappeared and came to Tehran. He tried to set up here and went broke. I felt sorry for him and gave him a job here but he wouldn't do the work -- he wouldn't cooperate with the other people.

As another example, look at this lamp (points to a lamp with turned wooden base and smart shade.) I designed it a while back and got an order for 150 units. I went to a woodshop and asked them to do the lathe work. The whole shop was busy every day turning out "vafur" (Opium pipe stems). Then I went to an old man near the Bazaar who has a good reputation and asked him to do the work. He said he didn't have the time. I suggested he hire a helper and he laughed and said "I am an old man now and want peace. I have had helpers in the past and they cause more trouble than I can now stand." Finally I bought a lathe and tried to have the work done here but I can't find a skilled man to run it.

The problem is that any worker in Iran with skills wants to be in business for himself. Then when he does go into business he provides such lousy service and products that you can't use him for anything but very traditional kinds of work. They have no management and have the same labor problems we have, only more so. You know, a man who is a laborer just can't become a manager in Iran. The others just won't accept him. We still have strong line between workers and managers that depends a lot on birth.

Researcher: It sounds to me like you may be trying to use the wrong people. Aren't there any young people you can hire and train yourself?

Baroumand: I just don't know. Where do you find such people? Look, right back there is a guy I have hired. He is a student in design school and he works part time for me doing paintings. I pay him 10,000 rials each month and let him come in whenever he wants. Now that is a good job for a student -- when I was a student in London I worked in a gas station in a tough neighborhood at nights for 12 hours at a shift. I would have jumped at a job like this where you can learn something about a business. But this man only thinks about money. He comes to me and wants extra money for milk. Milk only costs 5 rials! This is silly but I give him 5 rials a day extra for milk. If he gets a cold he wants me to pay for a visit to the hospital! It is not that I am cheap or stingy, it is just that he doesn't give a damn about work. He and all the others only care about how much money they can squeeze out of me. That is all they care or think about -- how to get more money without doing any work. You simply cannot run a business if no one cares. How do you get people to care? I have just about given up.

Researcher: I suppose that if he went to work in an organization where other people really cared about the work he might too. The problem is that he has no one to copy, no one to look up to as doing a good job.

Baroumand: That's right. I blame it all on the easy money that has come to this city. Lots of people are suddenly rich because of the oil boom and everyone knows that few of them did anything productive to gain that wealth. So a young man thinks "Why should I work hard. All I have to do is get a piece of the action like everyone else." It is a terrible trajedy -- the only kind of business you can run here is one based on machines and unskilled labor. If you try to use or develop skills you are fighting a losing battle.

Values are changing, especially among the young. They don't believe in anything. At least the old workers have certain beliefs -- they may not be correct and they may create problems, but at least they have beliefs. The kids just don't care about anything. Most of the thefts here have been by the students and younger people -- people who are better off and have more advantages.

Exhibit 1

BAROUMAND DESIGNS (B)

Plan for a Fancy Leather Goods Factory for Developing Countries

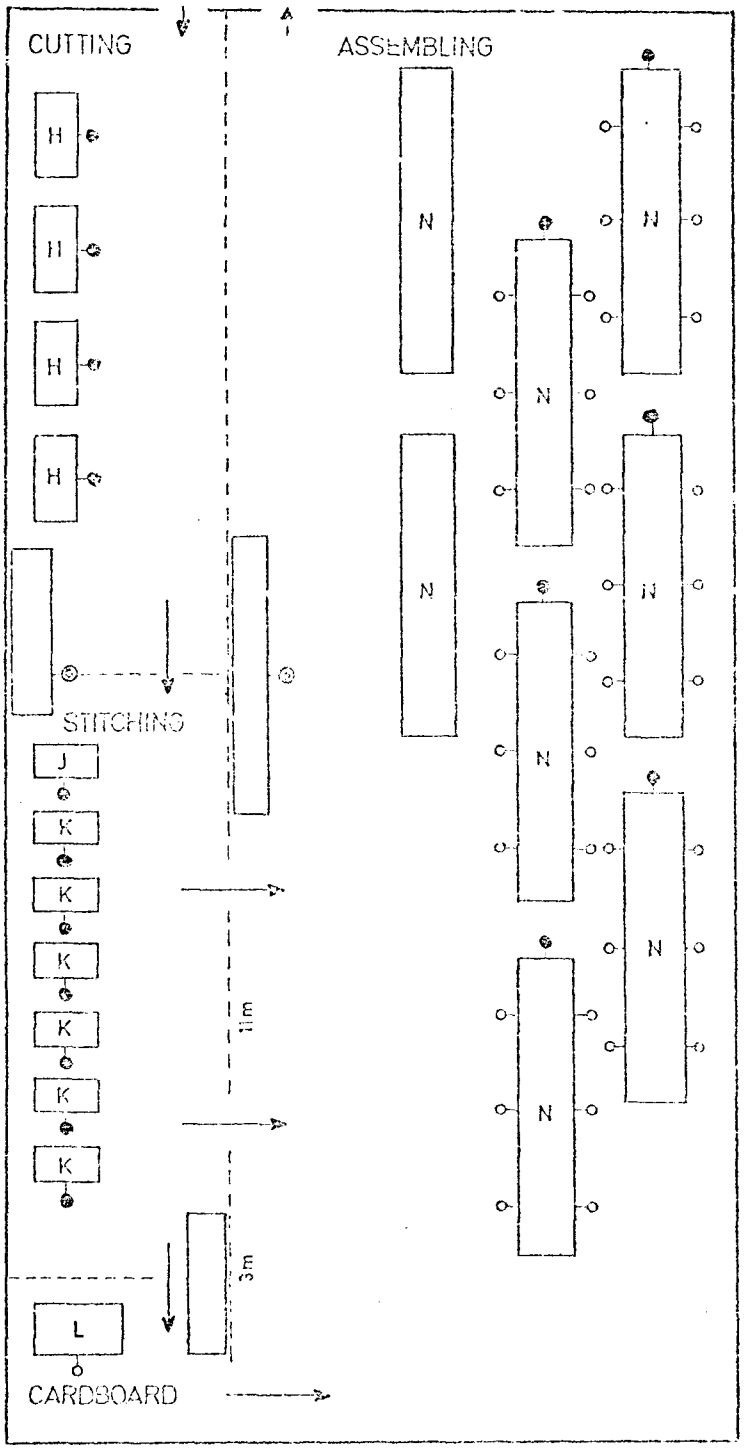

H = Cutting Bench
J = Skiving Machine
K = Sewing Machine
L = Cardboard Guillotine

N = Assembly Work Bench
● = Highly Skilled
◎ = Semi-skilled
○ = Unskilled

Source: A FANCY LEATHER GOODS FACTORY FOR DEVELOPING COUNTRIES, UNIDO Publication, United Nations, New York, 1972.

Exhibit 2

BAROUMAND DESIGNS (B)

Mr. Baroumand's Plan for a Basic Worksnop Set-up for Bag Production

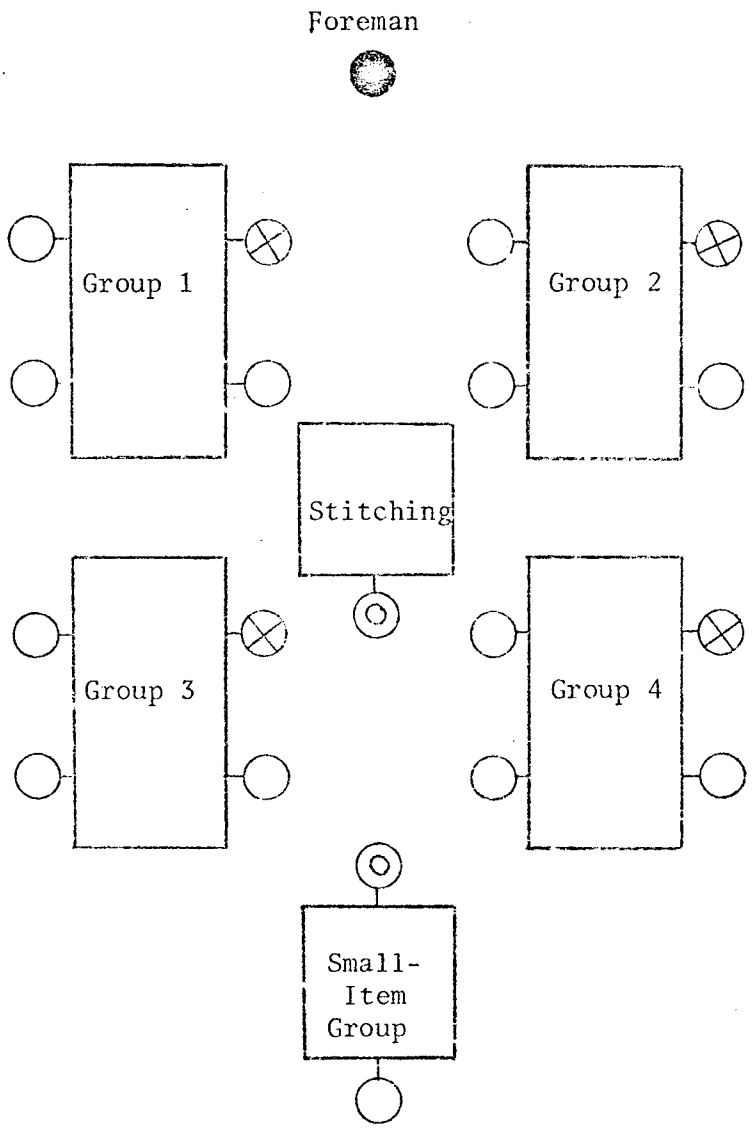

= Highly Skilled, Workshop Foreman, also does the production of samples of new products

= Semi-skilled, Cutter, Group Leader

= Semi-skilled, Machine Stitcher

= Unskilled, Assembler